City of Chubbuck

PRESSURE IRRIGATION SYSTEMS

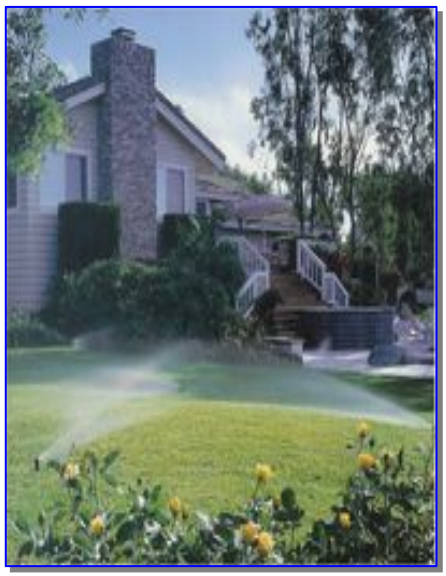

Design and Construction Standards

KELLER associates

January 2012
207066

City of Chubbuck

PRESSURE IRRIGATION SYSTEMS

PROFESSIONAL ENGINEER
REGISTERED
10967
1/10/12
STATE OF IDAHO
MICHAEL R. JAGLOWSKI

Design and Construction Standards

KELLER associates

January 2012
207066

Table of Contents

Table of Figures

Chapter 1 - General Information

1.1 Intent and Purpose

The intent and purpose of this document is to provide guidelines for the design and construction of irrigation systems in the City of Chubbuck. The document establishes a minimum standard for construction and design which must conform to the current Idaho Standards for Public Works Construction (ISPWC) and City ordinances.

This standard is not exhaustive and is not intended to replace project specifications and contract drawings. Project contract documents provide a more exhaustive cover of the requirements for design and installation of specific irrigation systems and must satisfy the requirements of this standard.

1.2 System Design and Performance Criteria

1. The system shall be designed to produce 5.5 gallons per minute (gpm) per acre of development delivered at the discharge header not to exceed 3.5 acre feet per acre of development per season.

2. The minimum pressure shall be 45 pounds per square inch (PSI). The delivery system shall be designed to provide constant pressure in the distribution system.

3. The system shall be designed to accommodate future growth and City-wide connectivity where possible.

4. Pumping stations shall be configured in parallel duplex with jockey pump arrangement.

5. Pump stations must be powered by electrical energy and driven by variable frequency drives (VFD); no diesel or gasoline powered pump stations shall be permitted.

6. The pump control systems shall include a programmable logic controller (PLC) for all switching and timing functions not performed by the VFD.

7. All pump stations intake structures must be fitted with a self cleaning intake screening device.

8. Pump stations must include an automatic discharge filter with a suction scanner via pressure differential.

9. Pump bowls, impellers and shafts must be able to resist wear from sand and grit using the most current materials and technology available.

10. The pump station shall be fitted with isolation valves to isolate individual pumps and also the pump station unit from the main discharge line and water source.

11. Pump stations must be inside a weather proof enclosure or building otherwise protected from adverse operating conditions.

12. The distribution system shall use only PVC or HDPE pipe materials for buried pipe; ductile iron may be used for exposed pipe.

13. The distributions system shall be designed to allow for evacuation of water.

14. The main distribution lines shall be located within the street pavement area.

Chapter 2 - Irrigation Booster Pump Station

2.1 General

2.1.1 System Description

Furnish a complete prefabricated skid mounted pump station manufactured by Precision Pumping Systems (PPS) or approved equivalent product.

2.1.2 Submittals

1. Product Data: Provide component and control system and complete wiring schematic, including the VFD, PLC and all control components. Provide manufacturer's literature including general pump assembly and pump curves showing performance characteristics with pump and system, operation point indicated, NPSH curve, controls, wiring diagrams and service connections and valves. Pump station manufacturer shall provide a list of at least 20 similar VFD pump station installations.

2. Shop Drawings: Indicate general assembly, components, accurate dimensions, clearances and methods of assembly for complete pre-assembled pump station.

3. Manufacturer's Installation Instructions: Include start-up instructions for pump station.

4. Operation & Maintenance: Include an O & M manual which is specific to this system. The O & M manual shall include VFD parameter settings, complete operator interface instructions with diagrams, instructions for scheduled maintenance, and instructions for operation and maintenance of an automatic discharge filter (if applicable).

5. Maintenance and Service Program: Include a copy of a renewable maintenance and service program as specified in subsequent sections. It shall be the owner's option as to whether to renew the contract after the required one-year service program has expired.

6. The pump station manufacturer shall provide a UL file number with the submittal package.

2.1.3 Project Record Documents

Accurately record actual locations of all concealed components, piping system, valves, heads, conduit and any other deviations from the bid documents. Provide an accurate as-built plan of the finished pumping plant within 15 days of completion.

2.1.4 Operation and Maintenance Data

1. Provide instructions for operation and maintenance of system and controls, seasonal activation and shutdown, including winterization and blowout, and manufacturer's parts catalog.

2. For pumps and accessories: Include trouble-shooting check lists, manufacturer's literature, cleaning procedures, replacement parts lists and repair data for pumps

3. Provide operation and maintenance instructions on all equipment.

2.1.5 Qualifications

Installer and Manufacturer: Company specializing in performing the work of this section with minimum 10 years experience for pre-fabricated variable frequency drive pump stations. The entire pump station and the control panel shall be designed, assembled, programmed and tested by a single manufacturer, within the confines of a UL certified manufacturing facility. The manufacturer shall employ service personnel who are trained, and certified, in every aspect of service that may be required on the pump station. It shall not be acceptable for the control panel to be designed, manufactured, programmed, or serviced by any entity, other than the pump station manufacturer. Pump station manufacturer shall provide a list of at least 10 similar VFD pump station installations with system references. The pump station manufacturer shall have in place a renewable maintenance and service program as specified in subsequent sections.

2.1.6 Regulatory Requirements

Conform to applicable codes for piping and wiring.

1. The pump station manufacturer shall provide a UL file number.

2. The pump station control panel shall include the State of Idaho Electrical Permit approval sticker including the permit number and be UL Listed and Labeled per Idaho Code.

2.1.7 Pre-Installation Conference

Convene one week prior to commencing work of this Section.

2.1.8 Coordination

Coordinate the work with site backfilling, landscape irrigation and electrical work.

2.1.9 Maintenance Service

Furnish service and maintenance of pump station and accessories for one year from Date of Substantial completion.

2.2 Products

2.2.1 Pipe Materials

1. Manufacturers: Manufacturer's products for all materials are as noted on the Drawings.

2. Pump Station Piping: All fabricated piping shall conform to ASTM specifications A3 for Grade B welded or seamless pipe. Discharge piping shall provide burst pressure ratings of a minimum of six times the maximum operating pressure of the system. Piping shall be sized so that the average velocity does not exceed five feet

per second and at no point exceeds ten feet per second. All welded fittings shall be seamless, conforming to ASTM Specification A234, with a pressure rating not less than 150 psi.

3. Steel Pipe

   a. Schedule 40 and 1/4 wall pipe.

   b. Size 4" and smaller conform to ASTM A120-74.

   c. Size larger than 4" conform to ASTM A53.

2.2.2 Pumps

Generally, if the total dynamic head requirements necessitate pump motors of 30 HP or less, the pumps shall be submersible. For pump motors greater than 30 HP, the pumps shall be close-coupled turbine. Exceptions shall be approved by the City Engineer. Note that energy available to the booster station shall be 3-phase electrical power. All pumps and control equipment shall be designed accordingly.

1. Submersible Pump – Approved on a pre-submittal basis only. Submittals shall be made to the City Engineer 20 working days prior to regularly scheduled development construction plans submittal. Approvals shall only be given on a case by case basis.

   a. The pump station shall utilize either, a single main pump, or multiple identical pumps (see performance specifications for details) capable of producing combined maximum flow rate and total dynamic head shown in the bid item table. The pump station manufacturer shall calculate all losses within the pump station, and size the pumps to ensure that the specified flow and head conditions are met at the pump station discharge. The pumps shall have a service factor of 1.15, but shall not operate within the service factor at the specified design points.

   b. The Submersible pumps shall be equipped with a rigid alignment bracket for the lower bearing and pump end to the motor end. The shaft coupling and up-thrust bearings shall be enclosed for protection against abrasives.

   c. The shaft coupling shall be type 416 stainless steel. The coupling shall be securely locked to the pump and have machine-cut splines to accurately mate with the motor shaft spline for quiet operation.

   d. The power lead cables shall be sized to minimize energy transmission loss. Special waterproof insulation for continuous submerged service. The cable shall have a tough outer jacket to be resistant to abrasion. A metal wire guard shall protect the cable past the pump bowls. The cable shall have a water tight seal at the entrance to the motor.

   e. The motor shall be designed for long life under continuous submerged operation. The motor shall be constructed to NEMA Standards using materials with proven resistance to corrosion over a wide range of water

quality. All electrical components and motor bearings shall be totally sealed inside the motor. A rotary mechanical shaft seal shall retain clean lubricant within the motor. Shaft bearings shall be rated for continuous service and have ample capacity for all operating loads, including pump to shut-down thrust.

f. The jockey pump shall be submersible turbine type. The jockey pump shall be variable speed, and shall be controlled by a VFD.

g. Submersible pumps shall be equipped with a slotted flow induction sleeves to screen incoming water, and insure proper operating temperature. The sleeves shall be PVC, slotted well casing, and shall be slotted to allow full flow, while screening out harmful debris.

2. Close Coupled Turbine Pump:

a. Manufacturer: Gould ITT or approved equal.

b. Bowl assembly: the intermediate bowls, suction bowl, and discharge adapter shall be flanged type constructed from close grained cast iron, and shall conform to ASTM designation A48, class 30. They shall be free from sand holes, blow holes, or other faults and must be accurately machined and fitted to close tolerances. The intermediate bowls shall have vitra glass lined waterways for maximum efficiency and wear protection. All intermediate bowls shall be of identical design for interchangeability. A discharge adapter shall be used to connect bowls to the discharge column. Threaded connecting bowls will be allowed on bowl sized 8" and smaller. Pumps 6” and larger shall be fitted with replaceable wear rings of bronze material. The suction case bearing shall be grease lubricated and protected by a bronze sand collar of ASTM B584 specification.

c. Impellers: the impellers shall be constructed from ASTM B584 Silicon Bronze and shall be the enclosed type. They shall be free from defects and must be accurately cast, machined, balanced, and filed for optimum performance and minimum vibration. Impellers are to be standard product of the pump manufacturer and not contain special workmanship to temporarily increase efficiency. They shall be securely fastened to the bowl shaft with taper locks of C1O45 steel. The impellers shall be adjustable by means of a top shaft-adjusting nut.

d. Column pipe: Column pipe shall be grade A steel pipe with the ends machined with 8 threads per inch with 3/16” taper and faced parallel to butt against the centering spiders.

e. Line shaft: Line shaft shall be ASTM 528 type 416 stainless steel. It shall be turned, ground and polished. A shaft of ample size to operate the pump without distortion or vibration, having a diameter that meets or exceeds the horsepower limitation recommended by the pump manufacturer shall be used. Line shaft bearing spacing shall not exceed 10 feet.

f. Discharge Header: Discharge header shall be of the high profile type and be suitable base of high-grade cast iron, ASTM A48-30, or fabricated steel. It shall be provided for mounting the motor with a discharge elbow having an above ground flanged discharge outlet flange pipe. The discharge opening shall be sized such that maximum flows velocity will not exceed 8 feet per second. The design shall have sufficient capacity to carry the combined weight of the column assembly. The design shall allow the top shaft to couple above the stuffing box. The stuffing box shall a minimum of five ring of packing and a lantern rings or grease chamber. It shall have a pressure relief connection. The packing gland shall be a split type secured in place with non-corrosive studs and nuts. The bearing shall be SAE660 bronze. Sealing between the stuffing box and the discharge head shall be accomplished by an "O" ring. A rubber slinger shall be secured to the shaft above the packing gland.

g. The suction bell shall be fitted with a suitable strainer of galvanized steel having a free area of at least four times the flow area of the suction pipe. The maximum strainer opening size shall not be more than 75% of the minimum opening of the water passage through the bowl and impeller.

h. The motor shall be a heavy duty squirrel cage induction type, NEMA design B, 1800 RPM vertical hollow shaft motor, with a non-reverse ratchet to prevent reverse rotation of the rotating elements. A suitable thrust bearing shall be incorporated in the upper end of the motor. The motor shall be normal (or premium) efficiency with a WP-I enclosure, 1.15 service factor, and suitable for use with 460 volt or 230 volt service, three-phase, 60-cycle electric service. A phase converter may be used where three-phase power is not available. The motor shall have class B insulation as specified by NEMA standards. The motor shall be coupled to the line by the use of insulated Polaris type wire connector. The pump / motor combination shall be designed such that during operation no place on the pump curve shall the load exceed the service factor of the motor.

3. End Suction Pump: Approved on a pre-submittal basis only. Submittals shall be made to the City Engineer 20 working days prior to regularly scheduled development construction plans submittal. Approvals shall only be given on a case by case basis.

2.2.3 Filters

1. Automatic Discharge Filter:

a. The automatic discharge filter shall be capable of filtering out particulates down to 300 micron size (0.0118 inches).

b. The pre-assembled pump station shall include an automatic self-cleaning discharge filter. The filter shall automatically remove filter cake from the interior of the filter element whenever there is a pressure differential between the intake and discharge of the filter. The filter shall include electronic motor that shall be operated by a programmable control system. The filter cleaning device shall be suction scanner type that shall suck

debris from a minimum 98% of the total filtration area. At no time during the flushing operation shall the waste water exceed 1% of the total system flow rate. During the flush cycle the pump station shall continue to provide filtered water to the irrigation system at no more than a 2 psi pressure drop. At no time shall the filter require a back flush cycle. The filter shall be an Amiad SAF, TAF, or EBS series or approved equal.

2. Intake Filter:

The intake screen shall be sized for the full flow of the pump system. The screen shall be a Clemons Clearwater Self-cleaning Intake Suction Screen, or approved equal, fitted with a 30 mesh (maximum opening) stainless steel screen and heavy duty sealed bearing. The intake filter shall be modified in such a way that the standard flanged outlet is removed and replaced by a model 7042 water tight half coupler. The water tight half coupler shall be sized such that it is compatible with the outside diameter of the wet well induction pipe.

2.2.4 Pump Station Construction

1. The entire pump station shall be manufactured and tested in the controlled environment of a manufacturing facility. No on site fabrication or assembly shall be acceptable. The pump station shall be pressure tested prior to the application of the baked on powder coating. No welding shall be performed on the pump station after it has been powder coated. The entire system shall be mounted to a 10ga Steel diamond plate skid. The substructure of this skid shall be fabricated from 5" channel iron. Steel tubing frames will not be accepted. The substructure shall consist of a perimeter frame with stringers running the length of the skid at 2 feet on center. All discharge piping shall be constructed from 10 ga. Steel pipe. Supports for discharge piping will be at a maximum of 4 feet on center. All components shall be mounted on this skid, in a professional workmanlike manner.

2. All bolts, washers, nuts and fasteners used in the assembly of the pumping system shall be zinc or cadmium-plated to retard corrosion.

3. Pump house buildings must be sufficiently ventilated to permit pump to operate in all expected weather conditions.

4. Pump intake works shall include a concrete stilling well and configured as shown on the attached drawings.

2.2.5 Valves

1. Check Valves

Check valves shall be provided at the discharge of the main pump on the top side of the pump skid. A continuous acting air relief valve shall be installed the upstream side of the check valve. The check valves shall be spring loaded non-slam type. The check valves shall be sized to allow full pump capacity with pressure loss not exceeding 2.5 psi. The check valves shall be Val-Matic Silent Check Valves or approved equal.

2. System Isolation Valves

a. The pump assembly shall include an isolation valve for each pump. These isolation valves shall be located on the discharge of each pump. The isolation valves shall isolate each pump in case the pump requires removal for service. The isolation valve for all pumps shall be wafer style gear operated butterfly valve as manufactured by Grinnell Co. or approved equal.

b. A system isolation valve shall be located on the discharge of the pump station to isolate the entire system. The system isolation valve shall be a wafer style gear operated butterfly valve as manufactured by Grinnell Co. Or approved equal.

.

3. Intake Screen Supply Valve

The pump station shall include an automatically controlled solenoid valve to supply water to the well intake screening device. The solenoid valve shall be controlled by the PLC and shall operate only when the pumps are operating. The PLC shall be capable of being programmed to operate the valve on a timed interval basis as well.

4. Pressure Relief Valve

A pressure relief valve shall be installed on the discharge manifold of the pump station. The valve shall be sized to adequately bypass enough water to avoid overheating of all pumps at or near maximum head conditions. All water discharged from the pressure relief shall be directed back into the wet well. The pressure relief valve shall be 2" 47-2-90 as manufactured by Dorot Valves or approved equal.

5. Air Relief Valve

The pump station shall include continuous acting 3/4" air relief valves on the discharge manifold, and ¼” or larger on main pump discharge. The air relief valves shall continuously discharge entrapped air in the system.

2.2.6 Controls

1. Gauges and Switches

The filter shall have a liquid filled pressure gauge on the inlet and outlet side of the filter to monitor the pressure loss of the filtered water. Gauges shall have a range at least as high as the shut-off head of the pump or pumps.

2. Low Intake Water Switch

The pumping system shall be equipped with an electronic means to shut off the system if the water in the wet well drops to within two feet of the pump intakes. The pumping system shall be equipped with a latching relay and not allow the

pumps to operate until the water is up to a safe operating level and the PLC circuit has been automatically or manually reset.

3. Pressure Transducer

The pressure transducer shall continually monitor system pressure. A 4-20ma signal shall be transmitted to the VFD and the VFD shall react according to pre-programmed criteria. The pressure transducer shall be manufactured by IFM Pressure Transmitters or approved equal.

4. Pump Control

a. The pump control panel shall be listed per UL 508A. The control panel shall also be rated for the environment in which the system will operate. The panel shall include an Human Machine Interface (HMI) touch-screen on the face of the door of the panel.

b. The variable frequency drive pump control panel shall be manufactured as follows:

- The variable frequency drive shall be an ABB ACS series VFD rated for the FLA of the pump motor.
- Parameter changes to the VFD shall be accomplished through the HMI touch-screen on the control panel door.
- The VFD shall include the pump and fan macro.
- The VFD shall be mounted in a control panel suitable for its intended environment. The enclosure shall be dust tight. No outside air shall enter the enclosure during normal operation.
- The pump control panel shall include a service entrance disconnect.
- The control panel shall include complete motor starter circuits (manual motor protectors and contactors) for all pumps including the VFD pump.
- The entire control panel, as well as individual devices shall be protected with circuit breakers. Fuses will not be accepted.
- All pump controls and status displays including the touch screen HMI user interface, pump HOA selectors, pump and system status lamps and speed potentiometer shall be installed on the front door of the control panel enclosure.
- The entire pump control panel shall be UL listed and rated for outdoor installation. All bidders shall include a UL file number with their bids.
- Provide and install one pressure transducer.

c. The pump control panel shall be completely manufactured and tested prior to delivery to the job site. The VFD shall be installed by a factory trained and certified technician. The variable frequency drive shall be installed, programmed and started by a factory certified technician. The pump station supplier shall follow and document specific start-up procedures upon initial start-up of the system per manufacturer's criteria. All start-up documentation shall be signed by the supplier and the owner and submitted

to the variable frequency drive manufacturer for their permanent file.

d. All components of the control panel, including the VFD and PLC, shall be housed inside a single NEMA 12 (or better) enclosure that is protected from direct pressurized water spray. The enclosure shall be appropriately environmentally controlled to ensure that the components within will operate properly, and will not be exposed to heat, moisture, contaminants, or creatures that will affect performance, or decrease components' lifespan.

e. The VFD shall operate the main pump at varying speeds to satisfy the programmed system pressure set point. As flow demand increases beyond the jockey pump's capability (if equipped), the variable frequency drive shall energize the main pump, and it shall operate at varying speeds to meet system pressure criteria. When demand increases beyond the main pump's capacity, the PLC will start a lag pump (if equipped), and the main pump will slow to accommodate the additional flow. This process will continue, as demand increases, until all subsequent lag pumps (if equipped) are operational, and the system reaches maximum capacity. As flow demand decreases the system will operate in reverse order and eventually de-energize until flow demand again increases. All operations shall be controlled by a programmable logic controller (PLC).

f. The pressure sustaining jockey pump (if equipped) shall operate independently, and shall be controlled by a variable frequency drive. The VFD shall operate the jockey pump at varying speeds to satisfy the programmed system pressure set point. The jockey pump shall be sized to handle small watering applications as well as to enable the variable frequency drive to attain sleep mode at low flow and no flow conditions.

5. Variable Frequency Drive (VFD)

a. The VFD shall be operable in either AUTO or HAND mode. In AUTO mode, the VFD shall instantly react to the 4-20 mA signal from the pressure transducer. In HAND mode, pump speed shall be manually adjustable with a speed potentiometer. The VFD shall include an integral programmable logic controller which shall control all speed and switching operations in the pump station. Programs shall be stored in a non-volatile EPROM to ensure, in case of a power failure, that the program shall not be lost. The VFD shall be factory programmed with macros designed specifically for pumping applications. VFD functions shall be controlled with an integral digital key pad and alphanumeric display with two lines of twenty characters for status messages.

6. Programmable Logic Controller (PLC)

a. The pump control system shall include a programmable logic controller (PLC) for all switching and timing functions not performed by the VFD. The PLC parameters shall be adjustable through the HMI, and shall not require an external computer for parameter changes. The PLC shall also perform the following functions:

- Programmed system start-up routine for initial start-up
- Variable start-up routines for power outages
- VFD lead / lag alternation on multi pump systems
- Log motor run times
- Cycle counter for all pumps
- Timing functions for all pumps
- Low water shutdown with automatic restarts
- Low & High pressure shutdowns
- Visual input / output indicators for troubleshooting
- Future timing and control changes that may be required to fine tune the pump station

The PLC for pump control systems shall be Allen-Bradley or approved equal.

7. System Protection Features

The following safety circuits shall be included in the pump station.

a. Line Side Power Monitoring

The pump station shall be capable of monitoring incoming power and automatically disconnecting power if it does not meet specified criteria. The system shall be capable of monitoring high or low voltage, phase failure, phase unbalance and phase reversal. If the specified criteria is not satisfied, a magnetic contactor shall be opened to prevent current to the VFD.

b. Line Reactor or DC Choke

The station shall include a line reactor or DC choke sized to handle variations caused by regenerative current reversals inherent to heavy duty cycles required to drive applications and shall be rated at a minimum of 3% impedance at full load amps.

c. Lightning and Surge Protection

The pump station shall be equipped with lightning and surge arrestors.

d. High Discharge Pressure

The pump station shall be equipped with a latching high pressure switch. If system pressure reaches a preset high level the entire system shall shut down and shall require manual reset.

2.3 Installation and Maintenance

2.3.1 Installers

1. Installation must be performed by persons with applicable specialty licenses and

experience in installing prefabricated pump stations. All electrical work shall be performed by a licensed journeyman electrician or by apprentices under his or her direct supervision.

2. The entire unit, with the exception of the pump, motor, valves, filters, electrical components, and control panels, shall be cleaned to bare steel and then coated with a baked on powder coating.

3. Provide for thermal movement of components in system.

4. A pumping plant system isolation valve shall be installed on the pumping system discharge on the filter outlet to completely isolate the pumping system from the turf systems. The valve shall be a butterfly valve with a gear operator.

5. Safety Protection

   a. Low intake water:

      The intake water circuit shall shut down the pumping plant if the water level drops to within 2 feet of the pump intake. The circuit shall have an adjustable timer to overcome sporadic fluctuations. The pumping station shall not restart until manually reset and the water is at a safe operating level.

   b. High discharge pressure:

      The discharge pressure circuit shall shut down if the discharge pressure reaches a preset high level. The system shall require a manual reset.

   c. Low discharge pressure:

      The discharge pressure shall shut down if the discharge pressure reaches a preset low level which could be caused by a broken pipe or excess system demand. The system shall require a manual reset. The circuit shall have an override for filling lines or other low pressure operations.

   d. Phase protection:

      A phase failure or low voltage safety circuit shall shut the system down in the event of either condition on the line side of the pump starter. Each pump shall have its individual protective device and time-delay to allow transient low voltage during motor starting to allow maximum motor protection. A manual reset shall be required for each pump.

2.4 Installer's Field Services

1. Prepare and start systems. A Factory Certified Technician for both the VFD and the Pump Station shall reside within 4 hours of any installation and be able to respond within 8 hours of notification. The technician must have at least 5 years experience with pre-fabricated pump stations, pumps, and VFD controls.

2. The pump station manufacturer shall provide, as part the bid, a one year maintenance and service program which shall be renewable annually at the owner's discretion. The maintenance and service shall be performed by a qualified technician who is employed by the pump station manufacturer. The program shall include the following:

- Spring start-up
- 3 in season checks:
  - check amp draw – all pumps
  - check packing and grease – cent. pumps
  - check overloads for trip rating
  - check circuit breakers for trip rating
  - inspect and clean panels. interior/exterior
  - test all indicator lamps, bulbs
  - test buttons, switches, selectors, etc.
  - check safety of all electrical comp.
  - inspect, tighten all electrical connections
  - inspect and test all fuses and fuse holders
  - inspect, test pressure transducers
  - inspect, tighten any leaking joints and couplers
  - inspect, clean component filters
  - test, adjust quick pressure relief valve
  - test all electrical valves
  - test all manual valves
  - test, adjust high & low pressure switches
  - test, adjust low water detection
  - test pressure gauges
  - inspect, flush discharge filter
  - examine and test self cleaning cw screen(s)
- Winterization.

2.4.1 Adjusting

1. Adjust control system to achieve owner/operator satisfaction.

2.4.2 Demonstration

1. Provide Pump and Irrigation system demonstration.

2. Instruct Owner's personnel in operation and maintenance of pump station. Use operation and maintenance material as basis for demonstration.

END OF SECTION

Chapter 3 - Distribution System

3.1 General

3.1.1 System Criteria

1. The maximum distance between shutoff valves shall be 1500 feet.

2. The system shall be designed with adequate connections and valves to be able to evacuate water from the piping with the use of compressed air and also "stop and waste" valve assemblies at low points in the system. See Standard Drawing No. SD-904.

3. Drawing 901 in ISPWC shall be modified to require a compression fitting at the curb stop. See Standard Drawing No. SD-902.

4. The main distribution line shall be located within the street right-of-way.

5. Curb stop, valve box and cover shall be located on the house side of the sidewalk. See Standard Drawing No. SD-903.

3.1.2 Submittals

1. Certifications and Testing according to project specifications and including:

    a. Certification that products used meet standards referenced.

    b. Copies of pressure test results on all piping systems

    c. Certification of all welders

    d. Reports defining results of dielectric testing and corrective action taken

    e. Notification of time and date of piping pressure tests

2. Shop Drawings including:

    a. Schedule showing pipe type, size, schedule of pipe and piping system appurtenances, type of linings and coatings, cathodic protection

    b. Exterior yard piping drawings (minimum scale 1 IN equals 10 FT) with information including:
        1. Dimensions of piping lengths
        2. Invert elevations of piping crossings
        3. Acknowledgement of bury depth requirements
        4. Details of fittings, tapping locations, thrust blocks, restrained joint segments, harnessed joint segments, and related appurtenances
        5. Acknowledgement of designated valve or gate tag numbers, instrument tag numbers, pipe and line numbers
        6. Line slopes and vents

c. Interior piping drawings (minimum scale 1/8 IN equals 1 FT) with information including:
   1. Dimensions of piping and end connections
   2. Invert elevations
   3. Location and type of pipe supports and anchors
   4. Locations of valves
   5. Details of fittings, tapping locations, equipment connections, flexible expansion joints, connections to equipment, and related appurtenances
   6. Acknowledgement of valve and equipment tag numbers and instrument tag numbers
   7. Provisions for expansion and contraction
   8. Line slopes and air release vents
   9. Rough-in data for equipment

d. Copies of any manufacturer's written directions regarding material handling, delivery, storage and installation

e. Technical product data on piping appurtenances

3.1.3 Delivery, Storage, Handling

1. Protect pipe coating during handling using methods recommended by manufacturer. Use of bare cables, chains, hooks, metal bars or narrow skids in contact with coated pipe is not permitted.

2. Prevent damage to pipe during transit. Repair abrasions, scars, and blemishes. If repair of satisfactory quality cannot be achieved, replace damaged material immediately

3.2 Products

3.2.1 Materials

1. Furnish piping, fittings and appurtenances meeting the requirements of this standard.

2. Use Purple PVC or Polyethylene pipe material only for buried distribution pipes and Ductile Iron for exposed pipes. Class 200 IPS with hand painted purple stripe will also be acceptable (See 3.2.2.4)

3. Use straight, round pipe.

4. For temporary piping not specifically addressed in Piping Schedule, utilize materials, joints and fittings equal to those specified for similar applications of permanent construction.

3.2.2 Components and Accessories

1. Underground Alarming Tape

a. Provide 12 gauge locating wire and install according to potable water systems standards as described in the current edition of the ISPWC.

b. Provide underground warning tape constructed of heavy gage 0.004 IN polyethylene film to identify all buried utilities except 3 IN and smaller irrigation pipe.

c. Provide 6-inch wide tape as follows:

Film Legend	Film Color
Irrigation or Non potable water	Purple

2. Drain Valves

a. Irrigation line drain valves as shown on Standard Drawing No. SD-904.

b. Other drain valves: Globe type, bronze compression stop with 3/4 IN hose thread end. Threaded or soldered connection.

c. For drainage of volumes less than 1 gallon, 1/4 IN NPT bronze drain cock with packed stem may be used if container can be placed under valve.

3. Label all valve box lids with the warning "**NON-POTABLE WATER**" or "**IRRIGATION WATER**".

4. Label all pipes, with the warning "NON-POTABLE WATER" or "IRRIGATION WATER" and paint pipes with a 2” wide purple stripe along the length of the pipe.

3.3 Execution

3.3.1 Examination

1. Prior to installation, inspect and verify condition of piping and appurtenances. Installation constitutes installer's acceptance of product condition for satisfactory installation.

3.3.2 Preparation

1. Correct defects or conditions which may interfere with or prevent a satisfactory installation

3.3.3 Exterior (Outside Building) Piping Erection/Installation /Application

1. Unless otherwise approved by the City, provide a minimum of 4 FT earth cover over exterior buried piping systems and appurtenances conveying water.

2. Provide flexible joint within 2 FT of point where pipe enters or leaves structure.

3. Provide second flexible joint not more than 6 FT nor less than 4 FT from first joint.

4. Provide balance of piping with standard laying lengths.

5. All pipe laying Pipe shall be in accordance to ISPWC

6. Provide insulating components where dissimilar metals are joined together.

3.3.4 Interior (Inside Building) Piping Erection/Installation

1. Piping in vertical and horizontal alignment shall be shown on construction drawings.

2. Alignment of piping smaller than 4 IN may not be shown. However, install according to Drawing intent and with ample clearance and allowance for

    a. Expansion and contraction

    b. Operation and access to equipment, doors, windows, hoists, moving equipment

    c. Headroom and walking space for working areas and aisles

    d. System drainage and air removal

3. Enter and exit through structure walls, floors and ceilings using wall penetrations per ISPWC.

4. Install vertical piping plumb and horizontal piping runs parallel with structure walls.

5. Locate and size sleeves required for piping system. Arrange for chases, recesses, inserts or anchors at proper elevation and location.

6. Use reducing fittings throughout piping systems. Bushings will not be allowed unless specifically approved.

7. Unions

    a. Provide unions within 2 FT of each threaded end valve and at each piece of equipment.

    b. Provide in position which will permit valve or equipment to be removed without dismantling adjacent piping.

    c. Where mechanical type couplings are used, they may serve as unions.

    d. At flanged connections additional unions are not required.

3.3.5 Connections with Existing Piping

1. Where connection between new work and existing work is made, use suitable and

proper fittings to suit conditions encountered.

2. Perform connections with existing piping at time and under conditions which will least interfere with service to those affected by such operation.

3. Undertake connections in fashion which will disturb existing system as little as possible.

4. Utilize suitable equipment and facilities to dewater, drain, and dispose of liquid removed without damage to adjacent property.

5. Where connections to existing systems necessitate employment of past installation methods not currently part of trade practice, utilize necessary special piping components.

6. Where connections involve potable water systems, potable water system shall be protected by a reduced pressure backflow device (RPBD) to preclude backflow and back-siphonage of non-potable water and contaminants into the potable water system.

7. Where connection involves potable water systems, provide disinfection methods as prescribed in these specifications.

3.3.6 Field Quality Control

1. General

   a. Upon completion of piping, but prior to application of insulation on exposed piping or covering concealed/buried piping, test all piping systems. Test must be reviewed by Engineer prior to being covered or enclosed.

   b. Perform pressure test using calibrated pressure gages and calibrated volumetric measuring equipment to determine leakage rates. Select each gage so that the specified test pressure falls within the upper half of the gage's range. Notify Engineer 24 hours prior to each test.

   c. Completely assemble and test new piping systems prior to connection to existing pipe systems.

   d. Acknowledge satisfactory performance of tests and inspections in writing to Engineer prior to final acceptance.

   e. Bear the cost of all testing and inspecting, locating and remedying of leaks and any necessary retesting and re-examination.

2. Testing methods and criteria

   a. Test pipe according to Section 901 of ISPWC.

3.3.7 Cleaning

1. Cleaning

   a. Clean interior of piping systems thoroughly before installing.

   b. Maintain pipe in clean condition during installation.

   c. Before joining piping, thoroughly clean and wipe joint contact surfaces and then properly dress and make joint.

   d. Immediately prior to pressure testing, clean and remove grease, metal cuttings, dirt, or other foreign materials which may have entered the system.

   e. At completion of work and prior to final acceptance, thoroughly clean work installed under these specifications. Clean equipment, fixtures, pipe, valves, and fittings of grease, metal cuttings, and sludge which may have accumulated by operation of system, from testing, or from other causes. Repair any stoppage or discoloration or other damage to parts of building, its finish, or furnishings, due to failure to properly clean piping system, without cost to Owner.

END OF SECTION

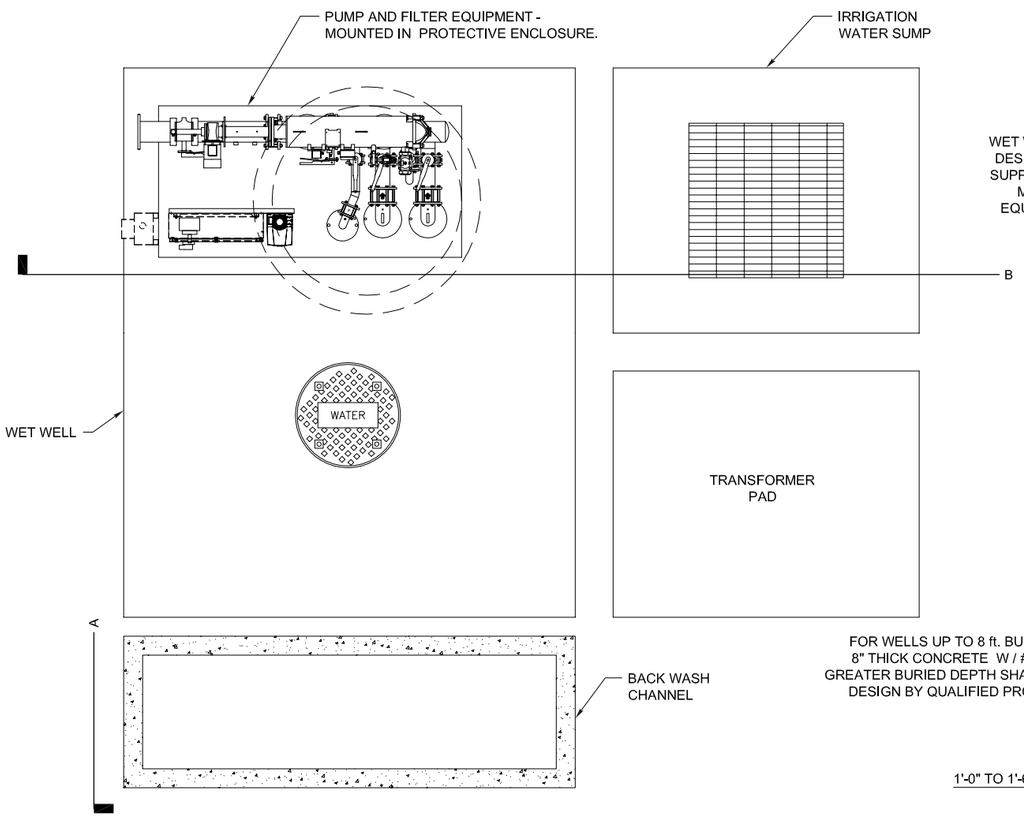

PLAN VIEW

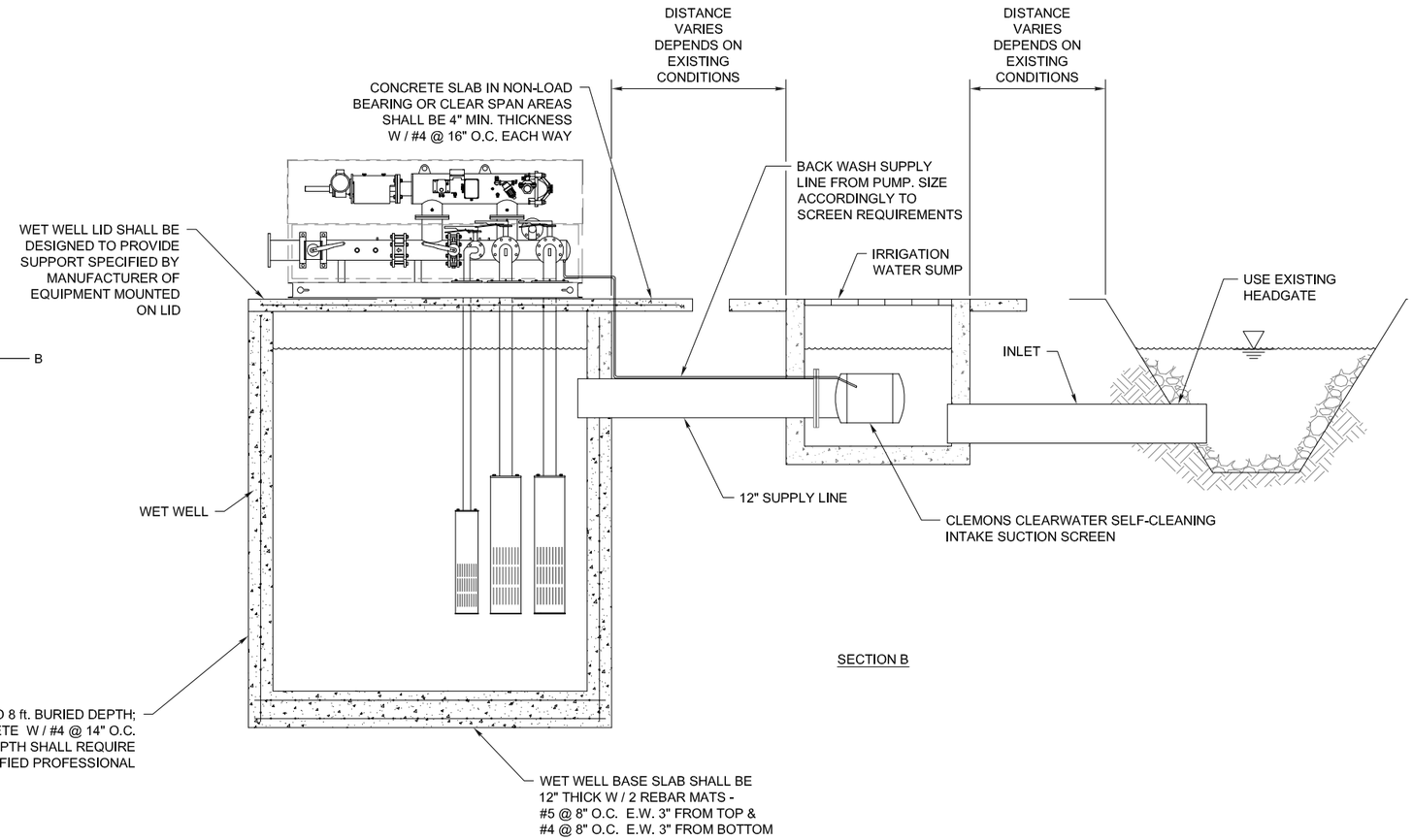

SECTION B

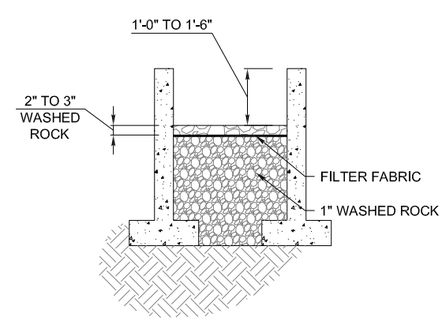

SECTION A

NOTE:
RELATIVE DIMENSIONS, LOCATION AND ORIENTATION OF COMPONENTS MAY VARY FROM THOSE DEPICTED.

PUMP AND FILTER SHOWN IS A SKID MOUNTED PACKAGE SYSTEM FROM PRECISION PUMPING SYSTEMS.

CONSTRUCTION SHALL FOLLOW ISPWC, IBC AND LOCAL CODES AS ADOPTED AND APPLICABLE AT TIME OF INSTALLATION.

MINIMUM CONCRETE STRENGTH: 3,000 psi

Y:\PROJECTS\107066-000 - CHUBBUCK PRESSURE IRRIGATION\DESIGN\CAD\PRELIMINARY\PUMP STATION\FIG 1.DWG 8/17/2010 2:20 PM

NO.	REVISIONS	BY	DATE

DRAWN: GLC	CHECKED: MRJ
DESIGNED: SA	APPROVED: ---
CAD NAME:	SCALE: (Based on 22"x34" sheet) NTS

KELLER associates
305 North 3rd Avenue, Suite A
Pocatello, Idaho 83201
(208) 238-2146

City of Chubbuck, ID

CHUBBUCK PRESSURE IRRIGATION

EXAMPLE PUMP STATION

PROJECT NO. 207066

SHEET NO. FIG 1

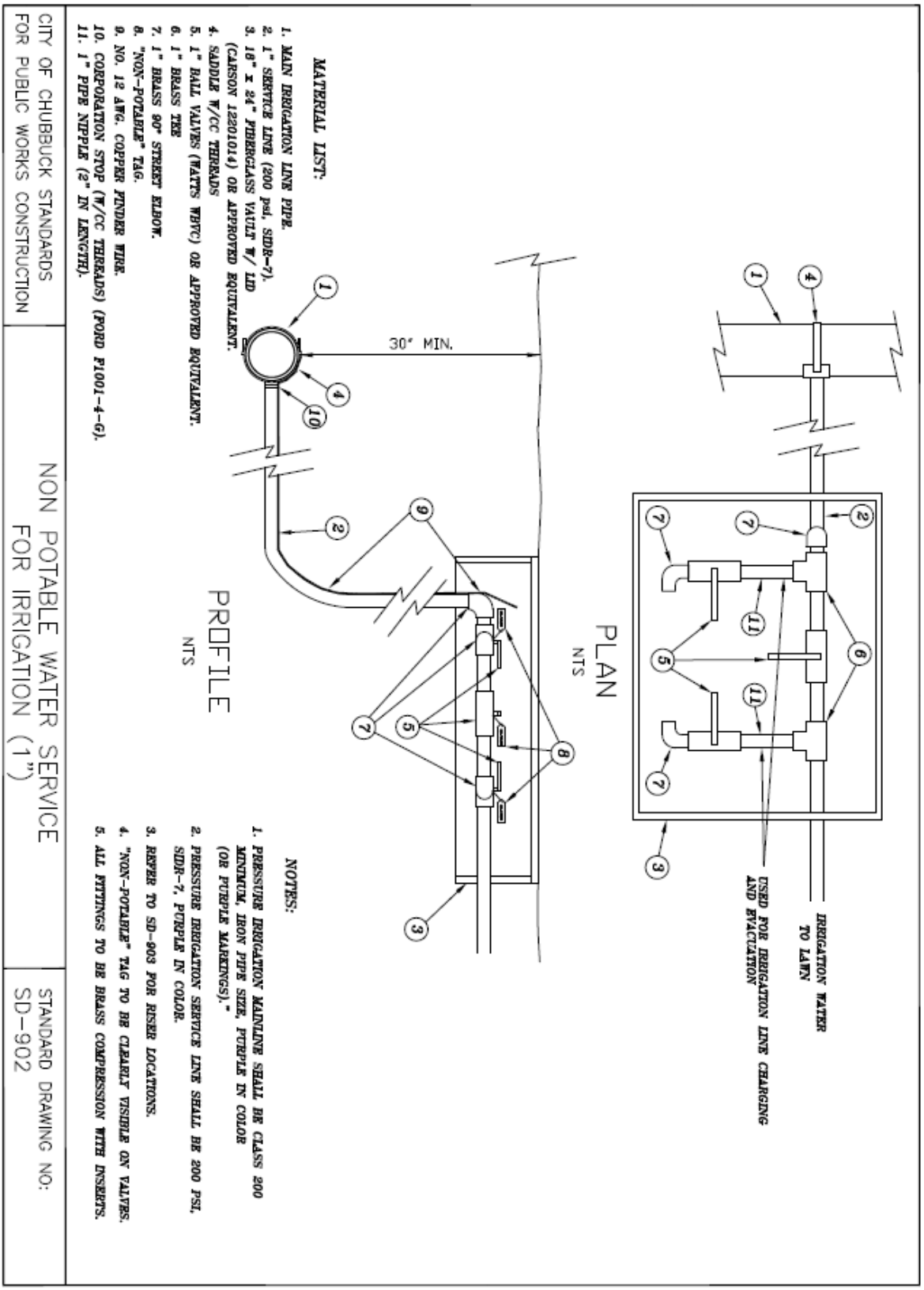

Figure 2 - Standard Drawing No. SD-902

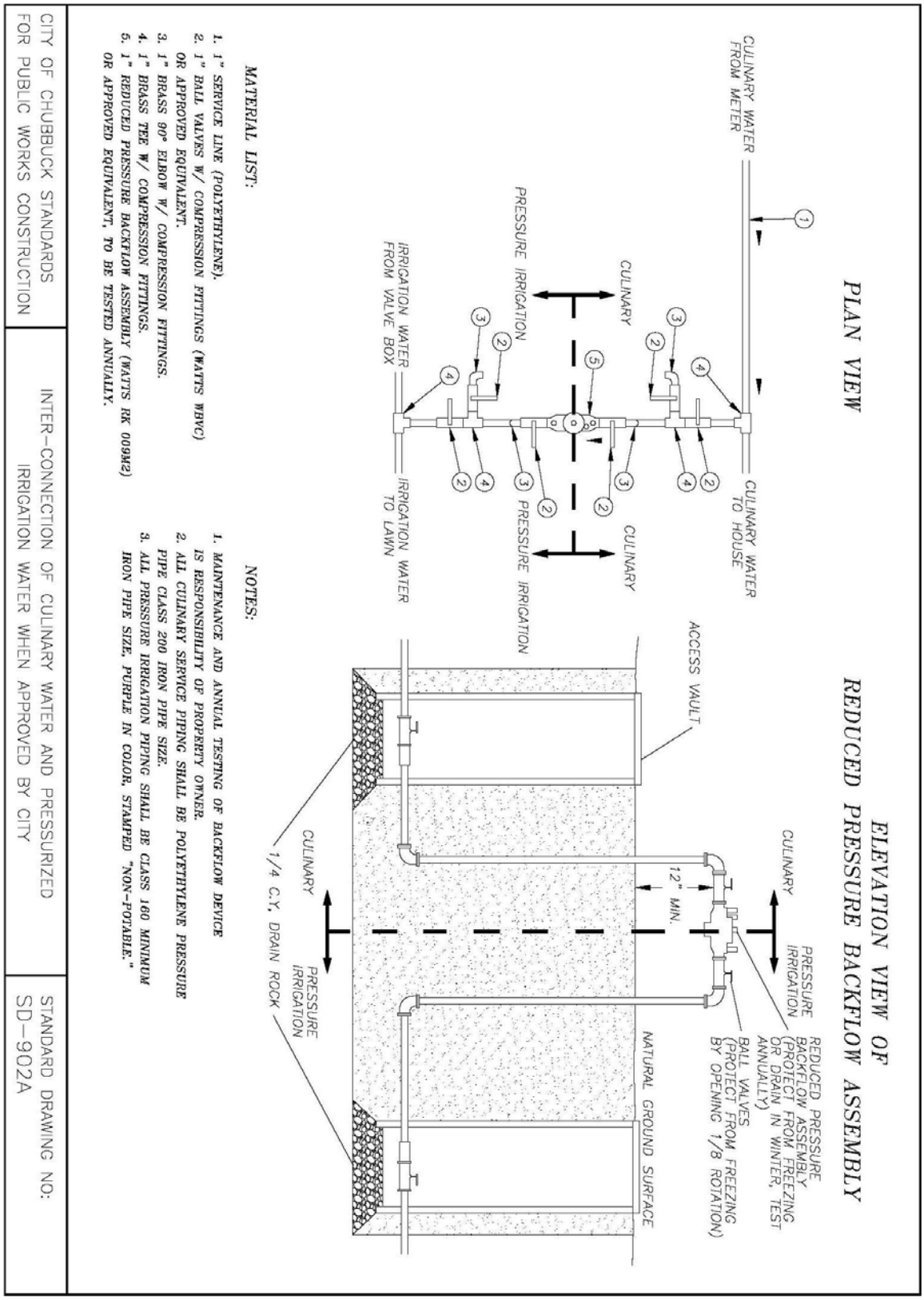

Figure 3 - Standard Drawing No. SD-902A

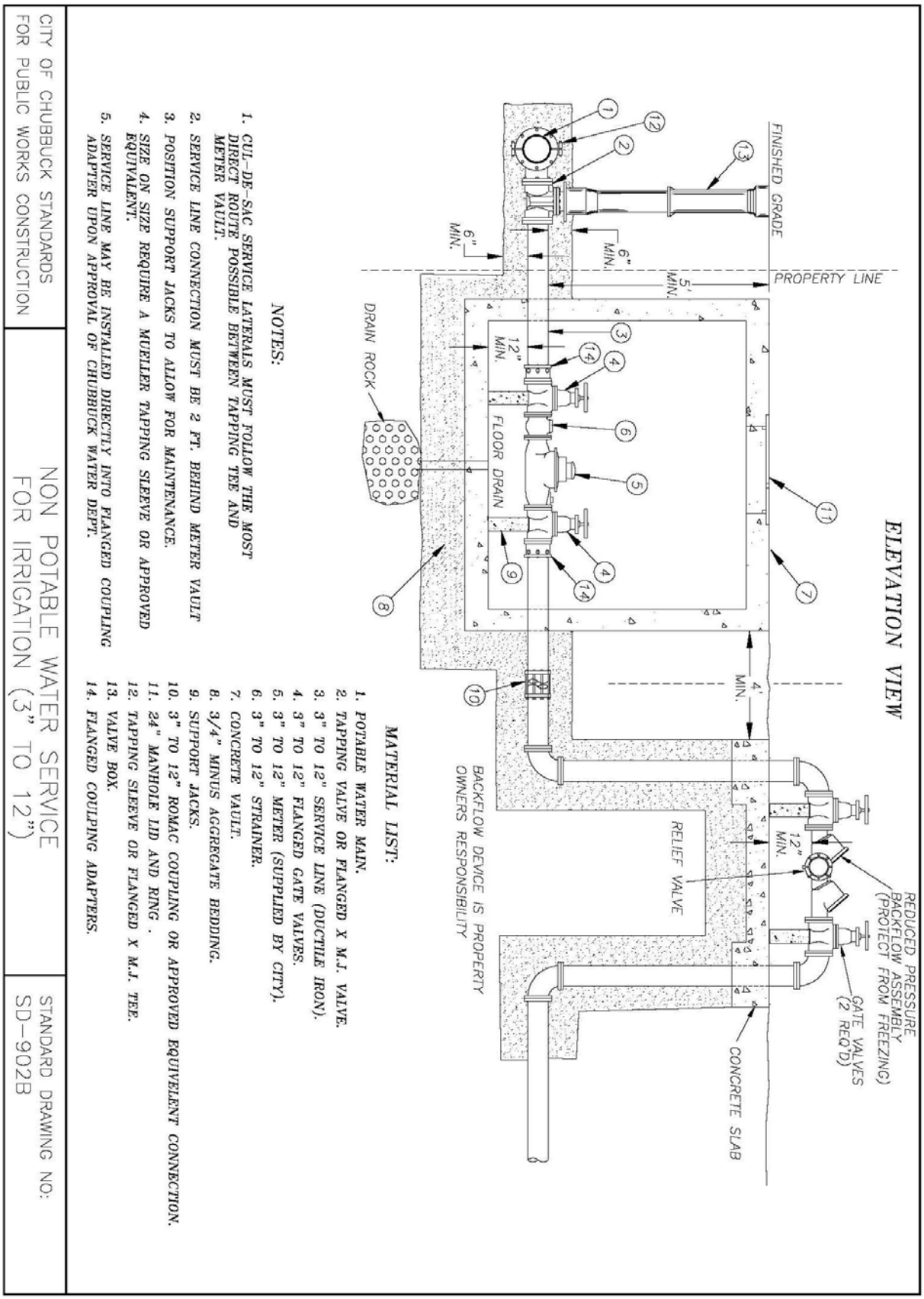

Figure 4 - Standard Drawing No. SD-902B

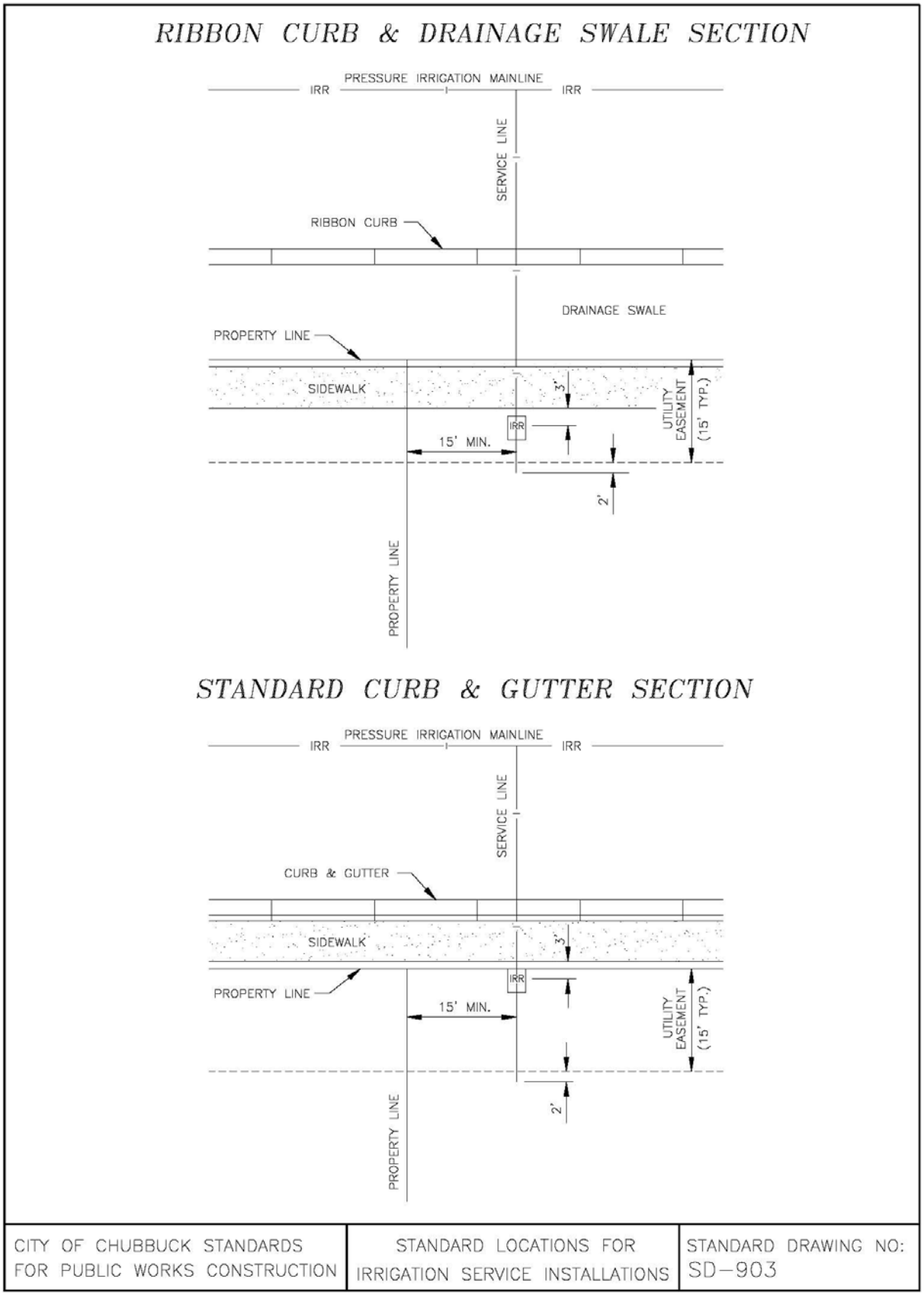

Figure 5 - Standard Drawing No. SD-903

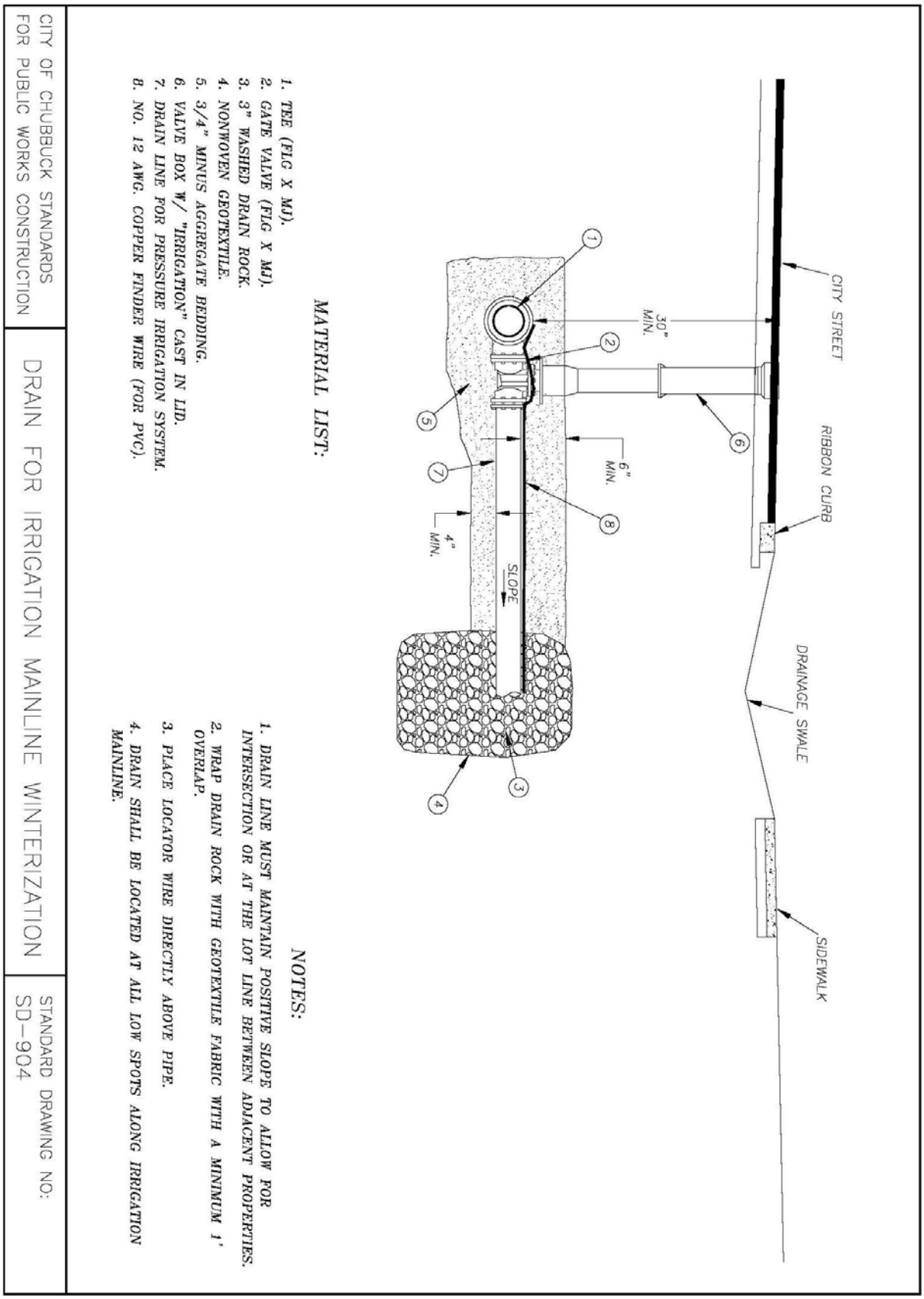

Figure 6 - Standard Drawing No. SD-904